southco	SOUTHCO NO. 19 SWELL LATCH	DATE	DRAWN	CHKD	SCALE	DRAWING NUMBER
		20 JUL 93	EJH		1 : 1	J-19-5

REV.	DATE	BY-CHKD	REVISIONS	ITEM	COMPONENT	PART NO.	MATERIAL	COLOR	PACKAGING
G	02MAY95	KGS	PRN:19 120	ASSEMBLY	—	19-51-YY 19-54-YY	—	—	BULK PACKED INDIVIDUALLY PACKED
H	17AUG2016	JPK CMS	PRN: P2016-1906		HANDLE	—	SEE NOTES	SEE TABLE I	
					BUSHING	—	SEE NOTES	BLACK	
					ACORN NUT	—	SEE NOTES	BLACK	
					WASHER	—	SEE NOTES	BLACK	
					TEE SHAFT	—	SEE NOTES	BLACK	

TABLE I

-YY	HANDLE COLOR			-YY	HANDLE COLOR			-YY	HANDLE COLOR		
-01	BLACK										

MATERIAL NOTES:
-HANDLE & WASHER: NYLON
-TEE SCREW: GLASS FILLED NYLON
-ACORN NUT: NYLON
-BUSHING: IR/BR RUBBER

INSTALLATION NOTES:
1 PREPARE HOLE IN DOOR AS SHOWN. OPTIONAL FLATS IN DOOR PREPARATION WILL PREVENT LATCH ROTATION.
2 PREPARE HOLE IN FRAME AS SHOWN.
3 WITH HANDLE IN OPEN (UNLATCHED) POSITION, SLIDE WASHER (IF REQUIRED) OVER THE TEE SHAFT, THEN INSERT TEE SHAFT THROUGH DOOR.
4 SLIDE BUSHING OVER TEE SHAFT AND SECURE WITH ACORN NUT. FOR "NO ADJUSTMENT" DOOR THICKNESS, RUN NUT UNTIL FULLY SEATED ON TEE SHAFT (1 Nm MAX. TORQUE). FOR OTHER DOORS THICKNESSES, ADJUST NUT FOR SATISFACTORY LATCHING ACTION.
5 CHECK THE FREE EXPANDED DIAMETER OF BUSHING. WHEN LATCHED, BUT NOT ENGAGED IN FRAME, BUSHING DIAMETER SHOULD BE 15.5 MINIMUM TO 16.5 MAXIMUM.

SHIPPING NOTES:
-IF BULK PACKED, HANDLE/TEE SUBASSEMBLIES, NUTS, WASHERS, AND BUSHINGS WILL BE PACKED SEPARATELY. IF INDIVIDUALLY PACKED, LATCHES WILL BE SHIPPED WITH ONE NUT, ONE BUSHING, ONE WASHER, AND ONE SUBASSEMBLY PER BAG.

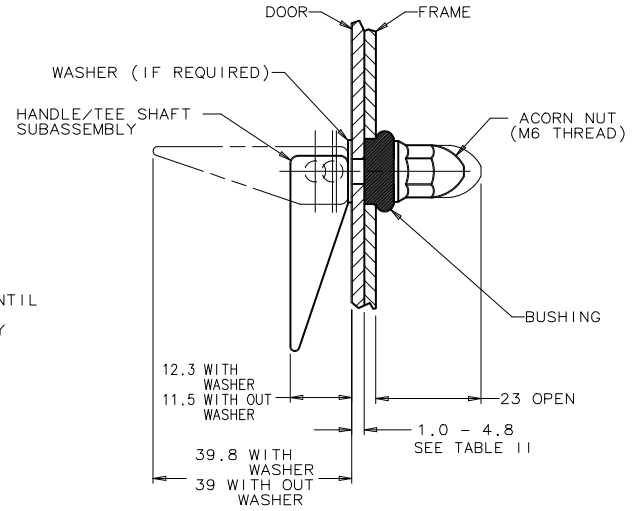

DOOR THICKNESS	USE WASHER?	ADJUSTMENT REQ'D?
1 TO 1.5	YES	YES
1.7 ±0.2	YES	NO
1.9 TO 2.3	YES	YES
2.5 ±0.2	NO	NO
2.7 TO 4.8	NO	YES

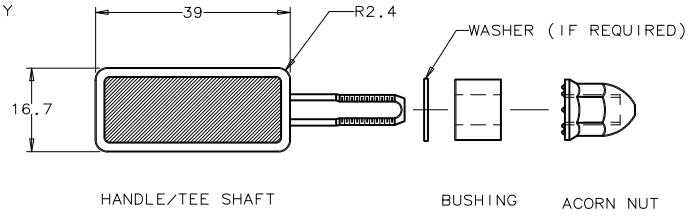

EXPLODED VIEW

TABLE II

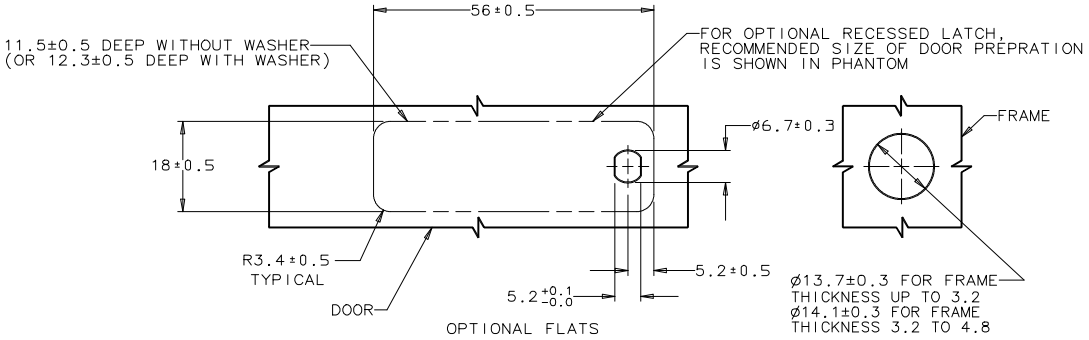

PANEL PREPARATION

FORMATBR 1/89

PROPRIETARY ITEM - EXCEPT FOR USES EXPRESSLY GRANTED IN WRITING INFORMATION DISCLOSED HEREON IS CONFIDENTIAL AND ALL RIGHTS PATENT AND OTHERWISE ARE RESERVED BY SOUTHCO, INC. PATENTS APPLIED FOR

ALL DIMENSIONS ARE IN MILLIMETERS.
ALL DIMENSIONS WITHOUT TOLERANCES ARE FOR REFERENCE ONLY.
THIRD ANGLE PROJECTION DRAWING.

DRAWING NUMBER J-19-5