SOUTHCO PERFORMANCE GUIDELINES

THE PERFORMANCE GUIDELINES SHOWN ON THIS PAGE ARE SUPPLIED AS A GENERAL GUIDE ONLY, AS CONDITIONS VARY WITH EACH APPLICATION AND METHOD OF INSTALLATION. STRENGTH DATA GIVEN IS FOR FAILURE OF THE PRODUCT OR FOR SUFFICIENT DEFORMATION TO MAKE PRODUCT INOPERABLE. NO SAFETY FACTOR HAS BEEN APPLIED IT IS RECOMMENDED THAT THE USER REQUEST A PRODUCT SAMPLE FOR TESTING TO DETERMINE THE SUITABILITY OF THE PRODUCT FOR THE PURPOSE INTENDED AND USER'S PARTICULAR APPLICATION.

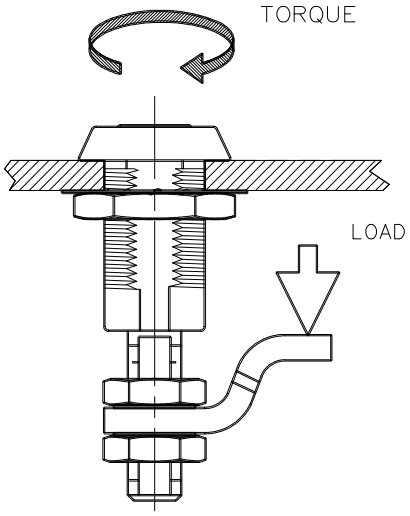

PART NUMBERS: E3-1W-X2 E3-22W-X2
E3-1W-X12 E3-22W-X12

COMPRESSIVE STRENGTH - Maximum WORKING LOAD①: 556 N / 125 LBF

Average ULTIMATE LOAD②: 2355 N / 530 LBF

TORQUE LIMITS - To develop a compressive force on the pawl of 445 N/ 100 lbs., an operating torque of 7.3 N-m / 65 in.-lbf was required to lock the fastener.③

RECOMMENDED TIGHTENING TORQUE - MOUNTING NUT: 20 N.m (177 in.-lbf)

SALT SPRAY EXPOSURE:
- ACHIEVED 500 HOURS PER "ASTM 117-94" FOR EXTERNAL SURFACES ON APPLICATION ONLY AND 230 HOURS FOR INTERNAL COMPONENTS INSIDE APPLICATION.
- SOME COLOR DISCOLORATION MAY OCCUR WITHOUT LOSS OF PRIMARY FUNCTION.

CYCLE TEST - 10,000 CYCLES WITH 450N LOAD ON PAWL

① WORKING LOAD is the maximum force that the product will withstand without affecting the operation or appearance of the product.

② Average ULTIMATE LOAD causes failure of the product or sufficient deformation to make the product inoperable.

③ Overloading the fastener beyond these conditions is not recommended.

REF: E3-117

REV	DATE	DRAWN/CHKD	DESCRIPTION
A	27SEP2004	AAB/MDY	PRN: P2004-1099
B	14JUL2011	ACH/MG	PRN: P2011-0842
C	23SEP2013	CMS/DGJ	PRN: P2013-1903

PART NUMBER | MATERIAL | FINISH

southco®

E3 VISE ACTION™ COMPRESSION LATCH ASSEMBLY, SINGLE HOLE MOUNT, INTERNATIONAL SERIES, STAINLESS STEEL

DATE	DRAWN	CHKD	SCALE
08SEP2004	AAB	MJS	NTS

DRAWING NUMBER TD-E3-10-J

MILLIMETERS

THIRD ANGLE PROJECTION

A4 PAPER SIZE