southco

PROPRIETARY ITEM - EXCEPT FOR USES EXPRESSLY GRANTED IN WRITING INFORMATION DISCLOSED HEREON IS CONFIDENTIAL AND ALL RIGHTS PATENT AND OTHERWISE ARE RESERVED BY SOUTHCO, INC.

SOUTHCO No. 47 CAPTIVE FASTENER
6-32 THREAD, FLARE-IN STYLE

DATE	DRAWN	CHKD	SCALE
10SEP2002	DLH	AJH	2:1

DRAWING NUMBER: J-47-1-632

REV	DATE	DRAWN/CHKD	DESCRIPTION

PART NUMBER	SCREW PROJECTION P-1	SCREW PROJECTION P-2	PANEL THICKNESS A, MIN	PANEL THICKNESS A, MAX	B	L
47-10-2X2-YZ	.04	.24	.058	.125	.015	.070
47-11-2X2-YZ	.11	.3				
47-12-2X2-YZ	.17	.36				
47-13-2X2-YZ	.23	.43				
47-10-2X4-YZ	.11	.3	.125	.189	.062	.135
47-11-2X4-YZ	.17	.36				
47-12-2X4-YZ	.23	.43				
47-10-2X6-YZ	.17	.36	.189	.250	.125	.197
47-11-2X6-YZ	.23	.43				
47-10-2X8-YZ	.23	.43	.250	.312	.189	.260

INCHES

ALL DIMENSIONS WITHOUT TOLERANCES ARE FOR REFERENCE ONLY.

THIRD ANGLE PROJECTION

B PAPER SIZE

MATERIAL AND FINISH:

KNOB: 6000 SERIES ALUMINUM, NATURAL OR BLACK POWDER COATED

SCREW: 400 SERIES STAINLESS STEEL, PASSIVATED; OR HARDENED CARBON STEEL, ZINC PLATE, CHROMATE PLUS SEALER (SEE "Z" TABLE) (NOTE: KNOB AND TOP OF SCREW AVAILABLE WITH POWDER COATING; SEE "Y" TABLE)

FERRULE: 6000 SERIES ALUMINUM, NATURAL

SPRING: 300 SERIES STAINLESS STEEL, PASSIVATED

"X" SCREW RECESS

0 - SLOTTED
2 - No.2 PHILLIPS
4 - T15 TORX®
6 - T15 TORX®/SLOT COMBINATION
8 - No.2 PHILLIPS/SLOT COMBINATION

"Y" FINISH ON KNOB & SCREW HEAD

1 - BRIGHT
4 - CUSTOM COLOR. SEE J-47-0-3 FOR ADDITIONAL SUFFIX
5 - BLACK POWDER COATED

"Z" KNOB TYPE AND SCREW MATERIAL

KNOB	SCREW MATERIAL	RECESS: SLOTTED TORX® PHILLIPS PHILLIPS/SLOT	RECESS: TORX®/SLOT
KNURLED	STAINLESS STEEL	0	N/A
SMOOTH	STAINLESS STEEL	1	N/A
KNURLED	STEEL	4	0
SMOOTH	STEEL	5	1

KNURLED KNOBS

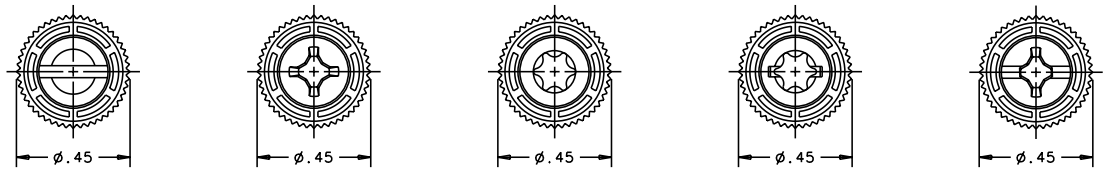

SLOTTED RECESS | No. 2 PHILLIPS RECESS | T15 TORX® RECESS | T15 TORX®/SLOT RECESS | No. 2 PHILLIPS/SLOT RECESS

SMOOTH KNOBS

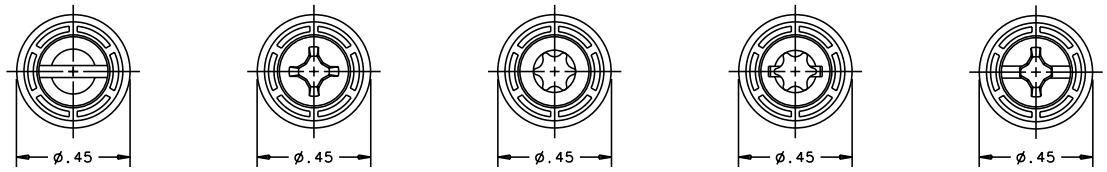

SLOTTED RECESS | No. 2 PHILLIPS RECESS | T15 TORX® RECESS | T15 TORX®/SLOT RECESS | No. 2 PHILLIPS/SLOT RECESS

NOTE: KNOB AND SCREW ARE SPRING LOADED OUTWARD, AS SHOWN BELOW

TO INSTALL FASTENER:

1. DRILL, THEN COUNTERSINK ACCORDING TO THE REQUIRED "B" DIMENSION.
2. INSERT FASTENER AND FLARE INTO COUNTERSINK WITH INSTALLATION TOOL PART NUMBER 47-106 OR 29-47-101-10.

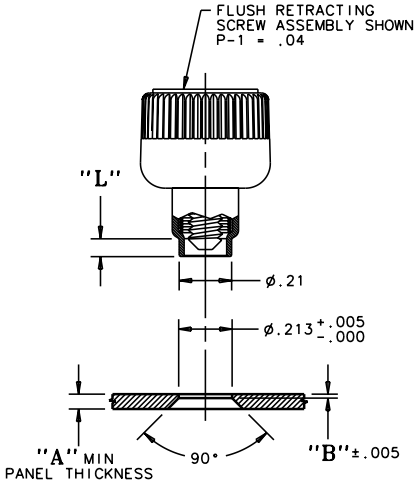

PANEL PREPARATION
PART NUMBER: 47-10-2X2-YO SHOWN

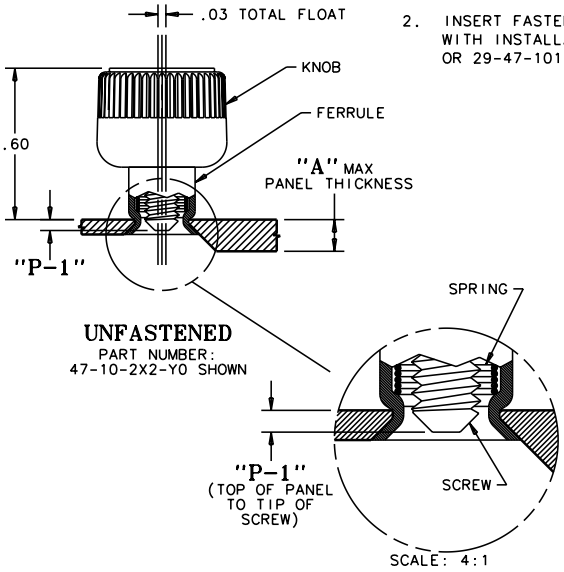

UNFASTENED
PART NUMBER: 47-10-2X2-YO SHOWN

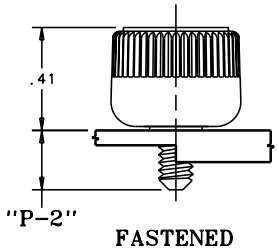

FASTENED
PART NUMBER: 47-10-2X2-YO SHOWN

TORX® IS A REGISTERED TRADEMARK OF THE CAMCAR DIVISION OF TREXTRON, INC.

DRAWING NUMBER J-47-1-632