REVISION HISTORY			
REV	DATE	BY	DESCRIPTION
B	30JAN2014	JAJ/YGC	PRN: P2014-0197

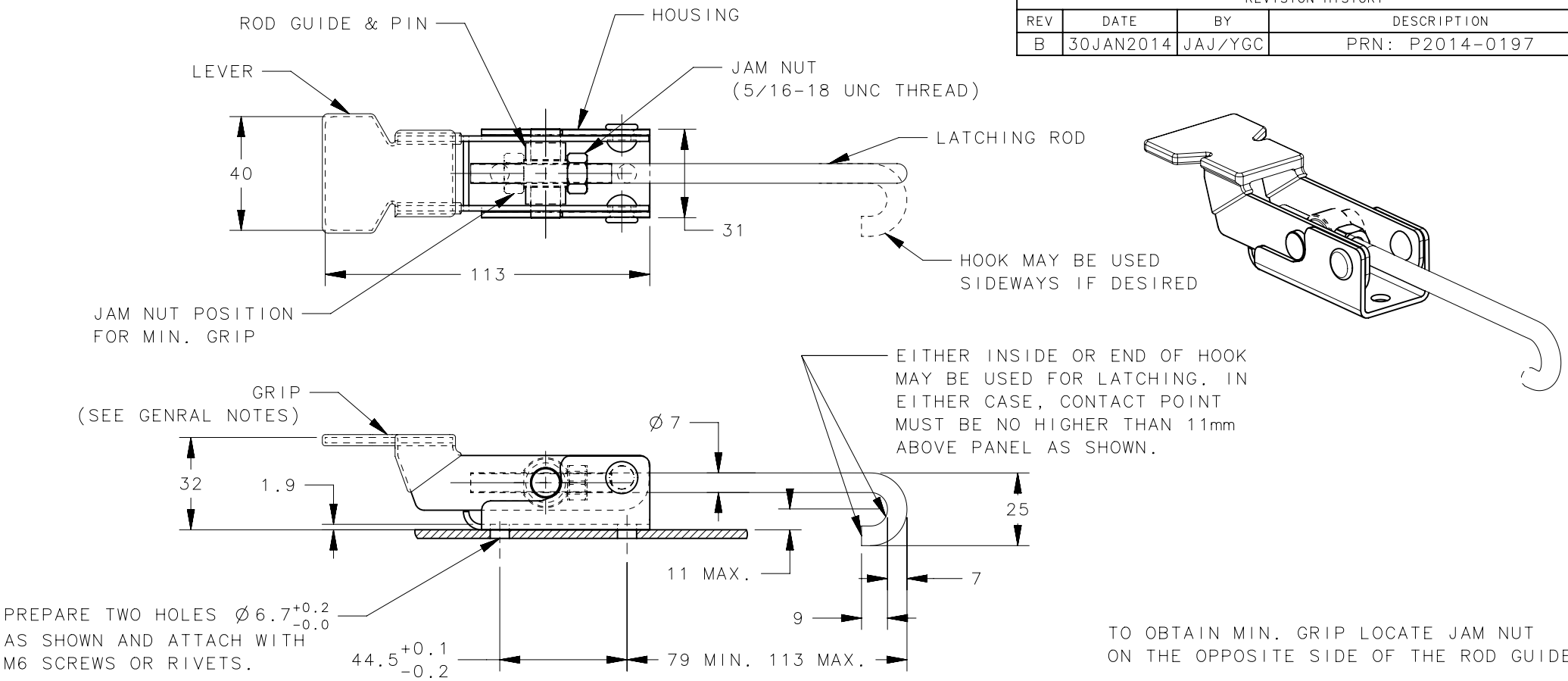

NOTES:
1. LEVER, HOUSING - 1010 STEEL
   ROD, JAM NUTS, ROD GUIDE & PIN - LOW CARBON STEEL.
2. LEVER, HOUSING - BLACK POWDER COAT
   ROD, JAM NUTS, ROD GUIDE & PIN - BLACK ZINC ALLOY
   RIVETS - NATURAL.

PART NUMBER	TYPE OF COMPONENT	MATERIAL	FINISH	GENERAL NOTES
A1-11-702-70	DRAW LATCH ASSEMBLY	SEE NOTE 1	ZINC PLATE + BRIGHT CHROMATE DIP	BLACK GRIP
A1-11-702-31	DRAW LATCH ASSEMBLY	SEE NOTE 1	SEE NOTE 2	BLACK GRIP
A1-11-702-20	DRAW LATCH ASSEMBLY	SEE NOTE 1	ZINC PLATE + BRIGHT CHROMATE DIP	YELLOW GRIP

THIRD ANGLE PROJECTION

MILLIMETERS [IN]

TOLERANCES UNLESS OTHERWISE NOTED

ALL DIMENSIONS WITHOUT TOLERANCES ARE FOR REFERENCE ONLY.

PER ASME Y14.5M-1994

PROPRIETARY ITEM
EXCEPT FOR USES EXPRESSLY GRANTED IN WRITING, INFORMATION DISCLOSED HEREON IS CONFIDENTIAL AND ALL RIGHTS, PATENT AND OTHERWISE, ARE RESERVED BY SOUTHCO, INC.

southco®
CONNECT·CREATE·INNOVATE

DESCRIPTION
SOUTHCO No. A1 ADJUSTABLE DRAW CATCH LATCH ASSEMBLY

SIZE	SYSTEM	DWG NO.
A4	NX	J-A1-11-702-20-M

DRAWN BY	DATE	SCALE	SHEET
JGK	20JUL1993	1:2	1 OF 1