southco	PROPRIETARY ITEM - EXCEPT FOR USES EXPRESSLY GRANTED IN WRITING INFORMATION DISCLOSED HEREON IS CONFIDENTIAL AND ALL RIGHTS PATENT AND OTHERWISE ARE RESERVED BY SOUTHCO, INC.	SPRING PLATE TYPE X414 ASSY	DATE	DRAWN	CHKD	SCALE	DRAWING NUMBER
			12DEC2007	CW	MJS	1:1	J-D4-X414

REV	DATE	DRAWN/CHKD	DESCRIPTION	PART NUMBER	MATERIAL	FINISH
			INITIAL DRAWING RELEASE	SEE TABLE 1		

MILLIMETERS

ALL DIMENSIONS WITHOUT TOLERANCES ARE FOR REFERENCE ONLY.

THIRD ANGLE PROJECTION

A4 PAPER SIZE

TABLE 1

ITEM	PART NUMBER				MATERIAL	FINISH
ASSEMBLY	D4-X414-260	D4-X414-285	D4-X414-310	D4-X414-335	--	--
SPRING PLATE	D4-X414-1	D4-X414-1	D4-X414-1	D4-X414-1	BRIGHT MILD STEEL	NATURAL
SPRING	D4-S5-175	D4-S5-200	D4-S5-225	D4-S5-250	CARBON STEEL WIRE	SEE NOTE 1
RIVET	DZUS 1069-1	DZUS 1069-1	DZUS 1069-1	DZUS 1069-1	--	--

TABLE 2

PART NUMBER	DIM "H"
D4-X414-260	6.7
D4-X414-285	7.3
D4-X414-310	7.9
D4-X414-335	8.6

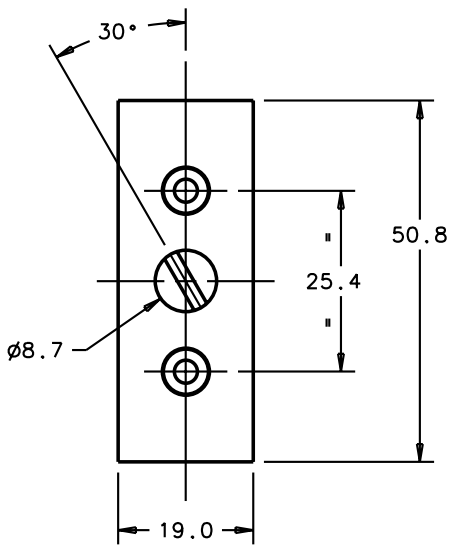

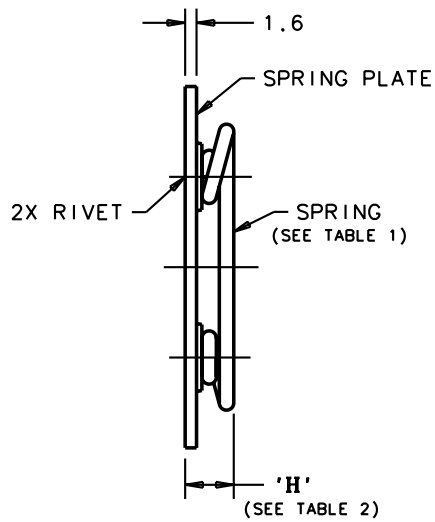

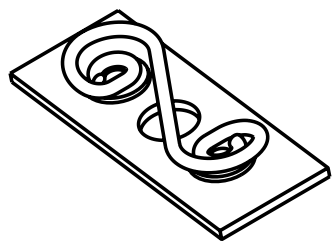

NOTES:
1. FINISH: AEROSPACE - YELLOW CHROMATE DIP
COMMERCIAL - ZINC PLATE BRIGHT CHROMATE